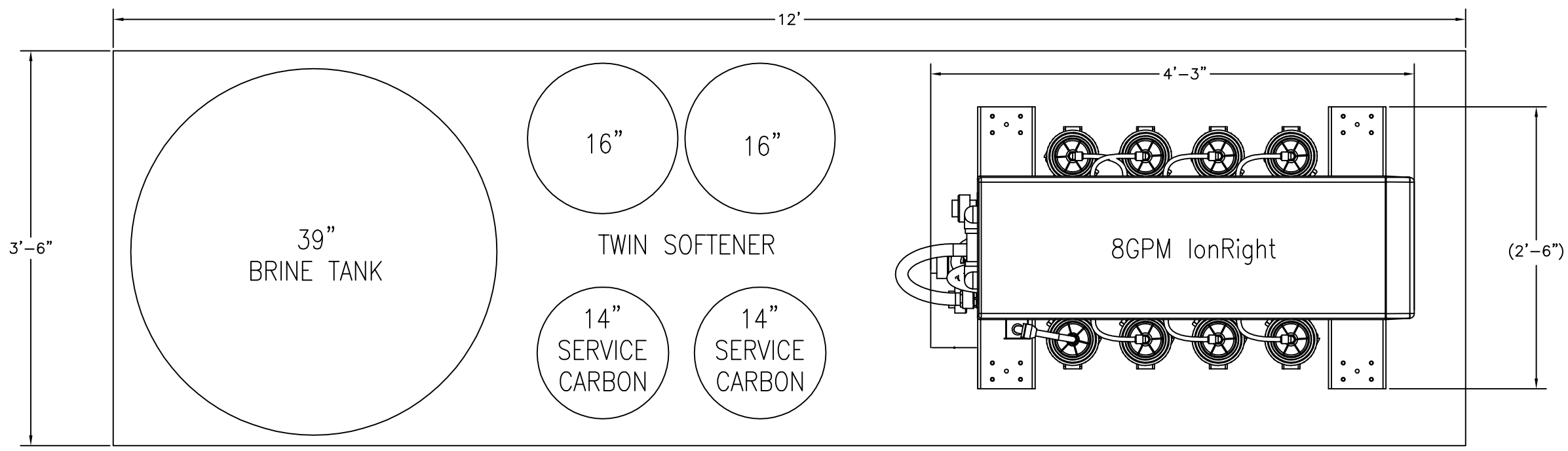


| REV | DESCRIPTION | DATE | DWN | CHKD | APVD | ECN |
|---|---|---|---|---|---|---|
| B | CHANGED BRINE TANK SIZE ADDED CARBON | 5/22/09 | DDZ | | | |
| A | INITIAL RELEASE | 5/19/09 | DDZ | | | |

COMPANY CONFIDENTIAL
THIS DOCUMENT AND ALL INFORMATION CONTAINED HEREIN ARE THE PROPERTY OF SIEMENS AND/OR ITS AFFILIATES. THE DESIGN CONCEPTS AND INFORMATION CONTAINED HEREIN ARE PROPRIETARY TO SIEMENS AND ARE SUBMITTED IN CONFIDENCE. THEY ARE NOT TRANSFERABLE AND MUST BE USED ONLY FOR THE PURPOSE FOR WHICH THE DOCUMENT IS EXPRESSLY LOANED. THEY MUST NOT BE DISCLOSED, REPRODUCED, LOANED OR USED IN ANY OTHER MANNER WITHOUT THE EXPRESS WRITTEN CONSENT OF SIEMENS. IN NO EVENT SHALL THEY BE USED IN ANY MANNER DETRIMENTAL TO THE INTEREST OF SIEMENS. ALL PATENT RIGHTS ARE RESERVED. UPON THE DEMAND OF SIEMENS, THIS DOCUMENT, ALONG WITH ALL COPIES AND EXTRACTS, AND ALL RELATED NOTES AND ANALYSES, MUST BE RETURNED TO SIEMENS OR DESTROYED, AS INSTRUCTED BY SIEMENS. ACCEPTANCE OF THE DELIVERY OF THIS DOCUMENT CONSTITUTES AGREEMENT TO THESE TERMS AND CONDITIONS.

| | | |
|---|---|---|
| DESIGNER | DZ | DATE 5-12-09 |
| CHECKER | SW | DATE 5-12-09 |
| ENGINEER | SW | DATE 5-12-09 |
| MANAGER | DP | DATE 5-12-09 |
| FILE: | 0905-019-01_ | |
| SCALE: | NONE | |

TITLE WATER SYSTEM
LAYOUT
RO CDI

CLIENT

SIEMENS Water Technologies
725 Wooten Rd, Colorado Springs, Colorado 719-550-2056

| PROJECT | CODE | DRAWING | SHEET | REV |
|---|---|---|---|---|
| | | | 1 OF 1 | B |

STD: BORDER-0106-24X36D1

INTL REF: G:\SECURED\AE-SALES\2009\0905-019_UNIV

BAR = 1" AT PLOT SCALE